MONTAGEANLEITUNG
PANDORA

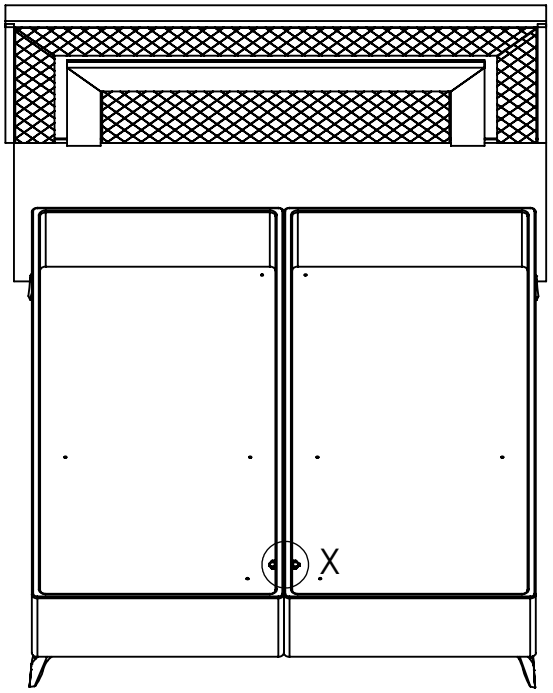

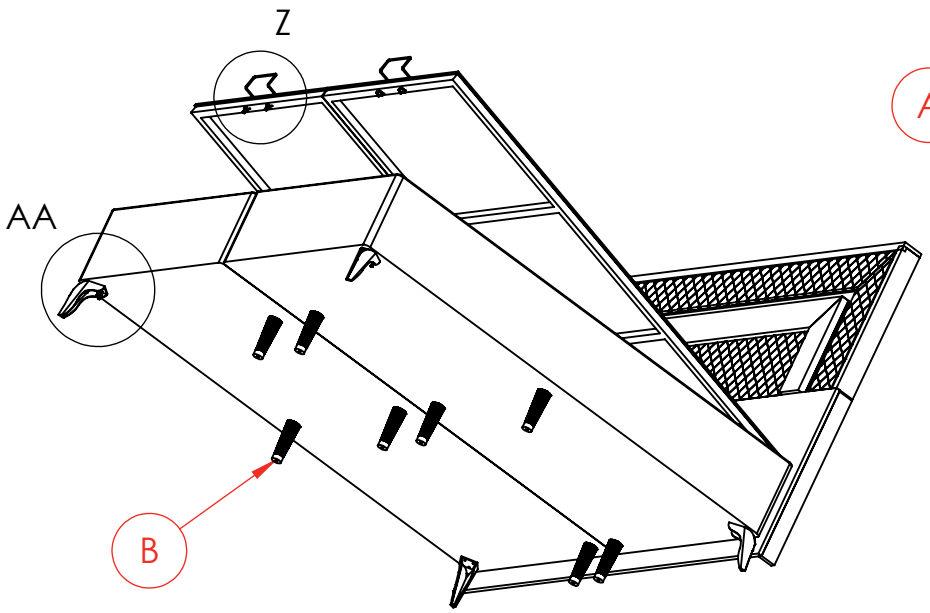

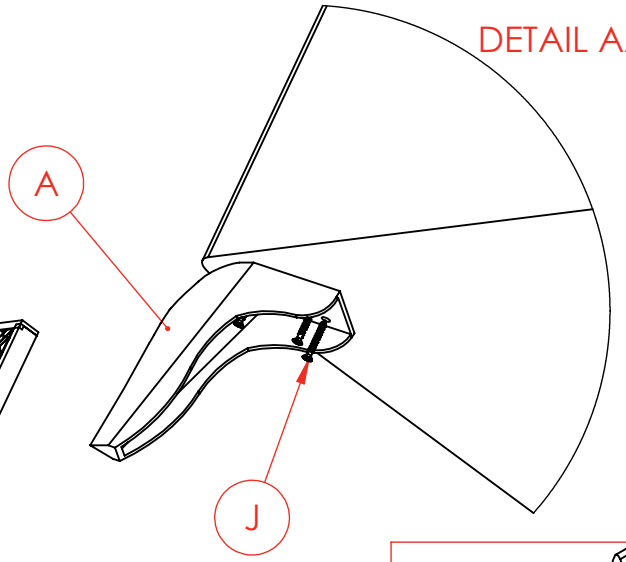

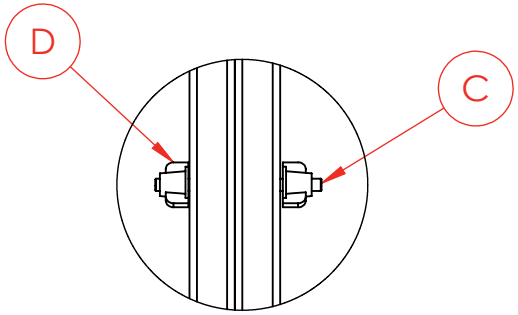

DETAIL X

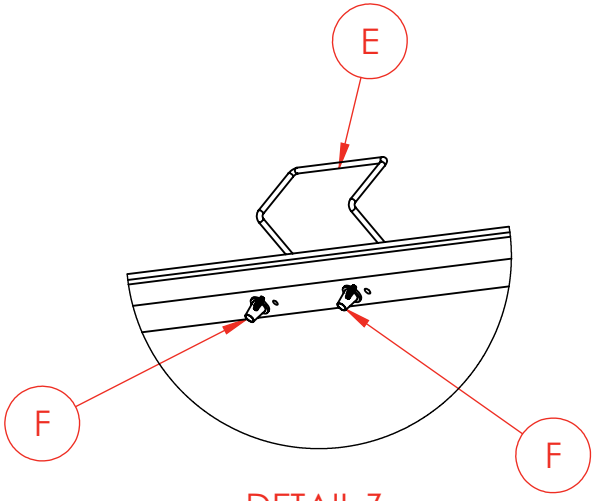

DETAIL Z

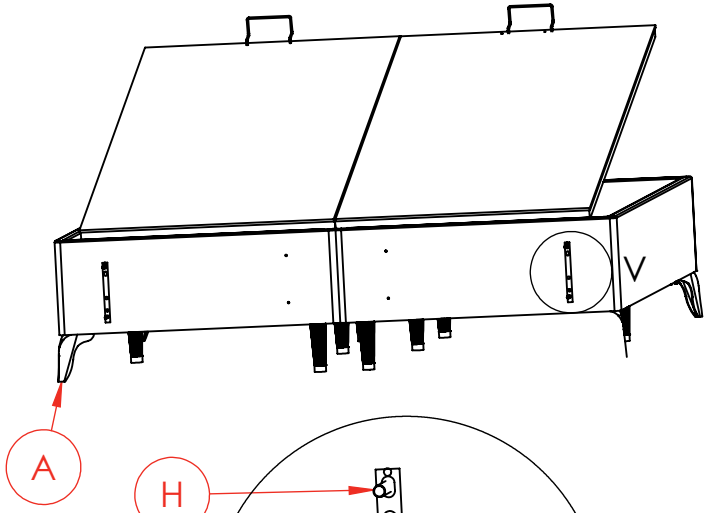

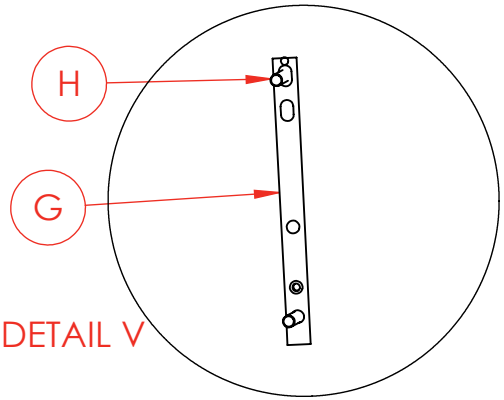

DETAIL V

AX4	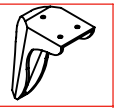
BX8	
CX2	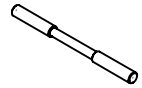
DX4	
EX2	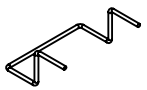
FX4	
GX2	
HX4	
JX12	